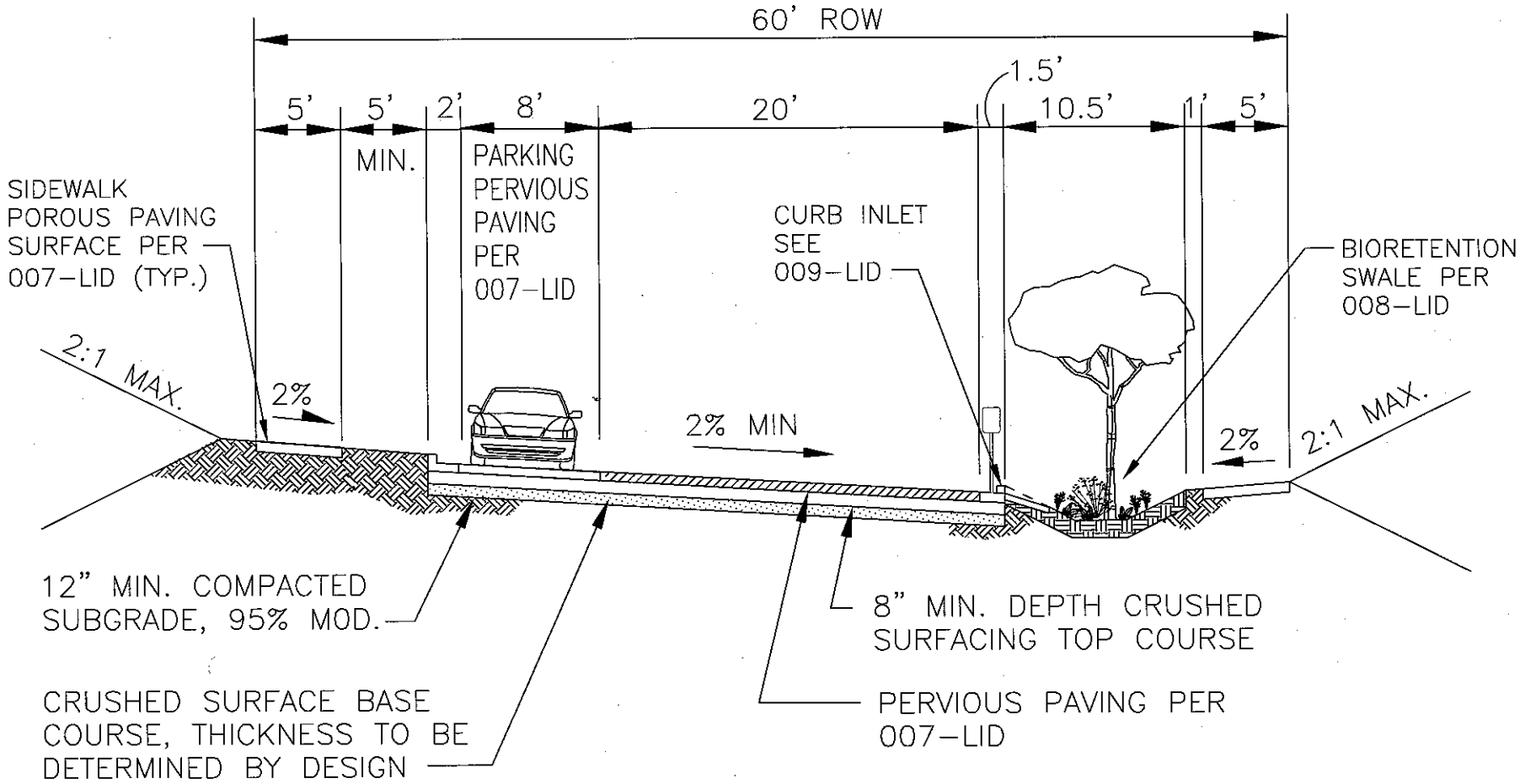

TOWN OF EATONVILLE, WA
DEPARTMENT OF PUBLIC WORKS

LID TYPICAL VERTICAL CURB
60' ROW ROADWAY

STANDARD PLANS

DRAWING No.
001-LID

REVISION: JUNE 2008	NOT TO SCALE	BY: ELR

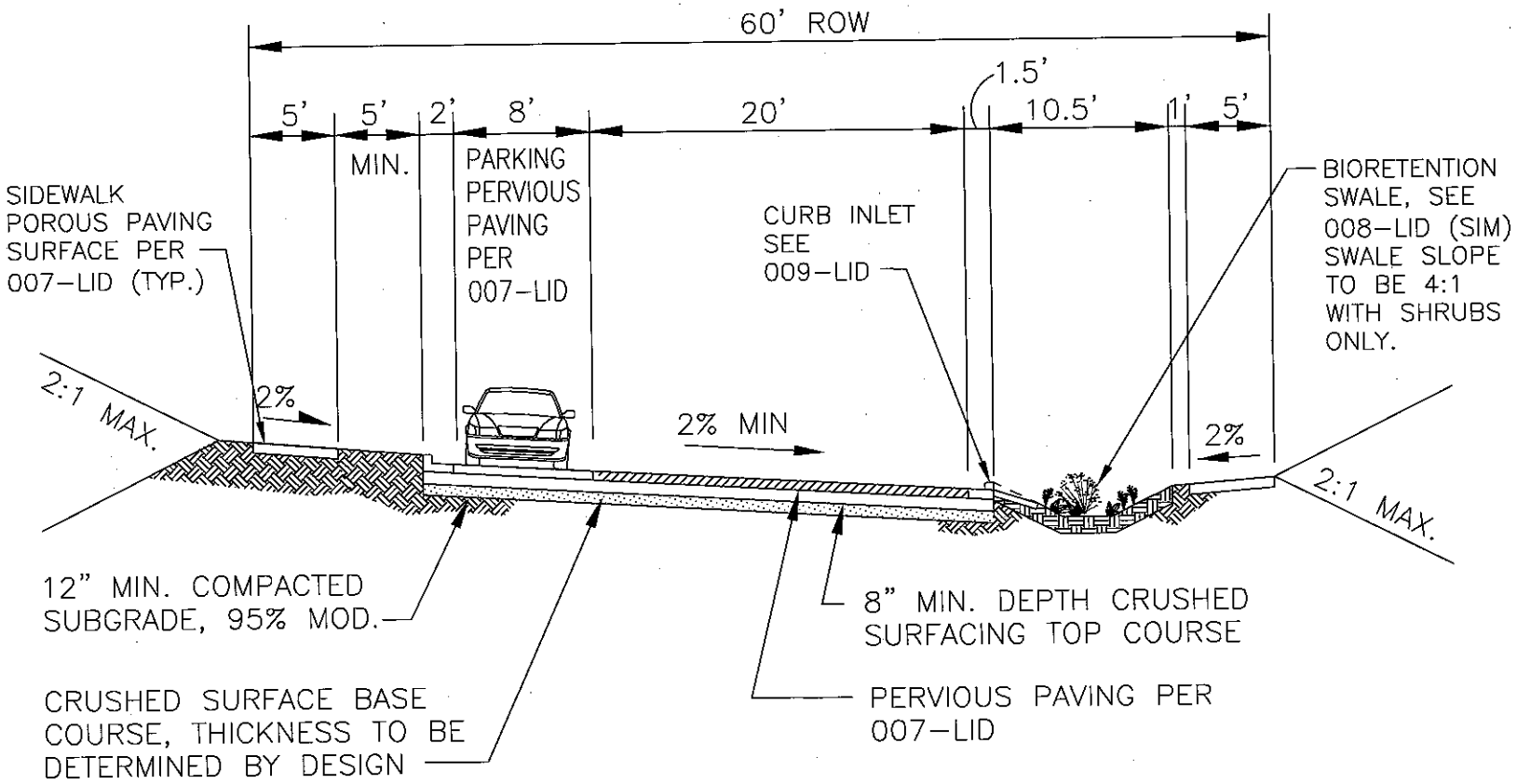

NOTE: NO STREET SIGNS WILL BE PERMITTED IN THE AEROSPACE ZONE.

TOWN OF EATONVILLE, WA DEPARTMENT OF PUBLIC WORKS		
LID AEROSPACE ZONE **60' ROW - TAXIWAY** STANDARD PLANS		DRAWING No. 002-LID
REVISION: JUNE 2008	NOT TO SCALE	BY: ELR

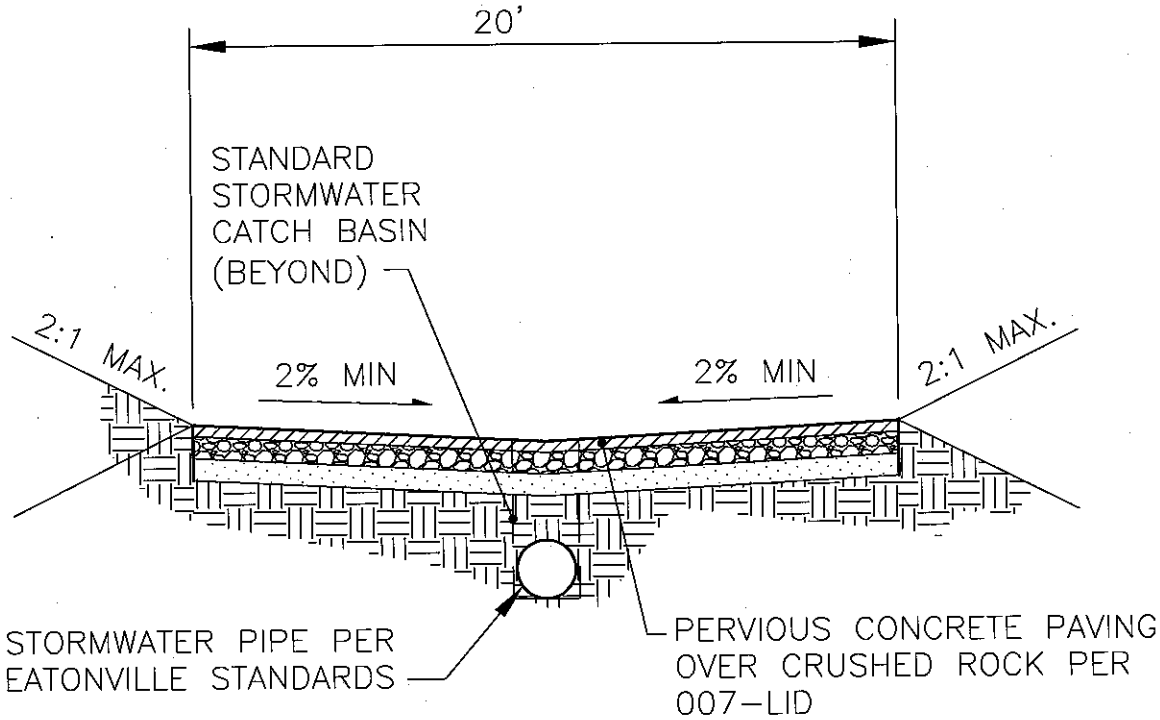

TOWN OF EATONVILLE, WA DEPARTMENT OF PUBLIC WORKS		
LID TYPICAL **20' ALLEY ROW**		
STANDARD PLANS		DRAWING No. 003-LID
REVISION: JUNE 2008	NOT TO SCALE	BY: ELR

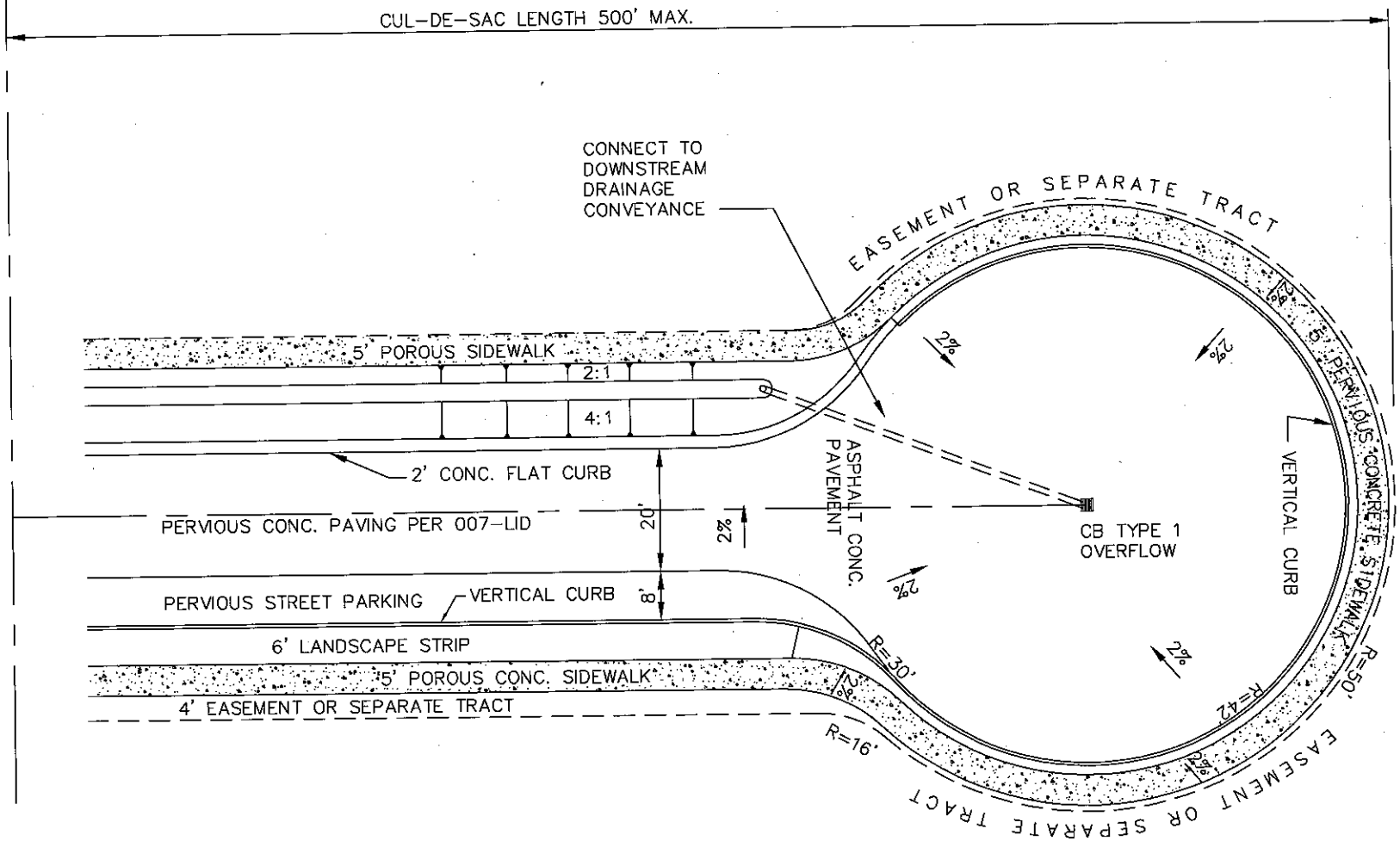

TOWN OF EATONVILLE, WA

DEPARTMENT OF PUBLIC WORKS

LID CUL-DE-SAC PLAN - 50' RADIUS

STANDARD PLANS

DRAWING No. 004A-LID

REVISION: JUNE 2008	NOT TO SCALE	BY: ELR

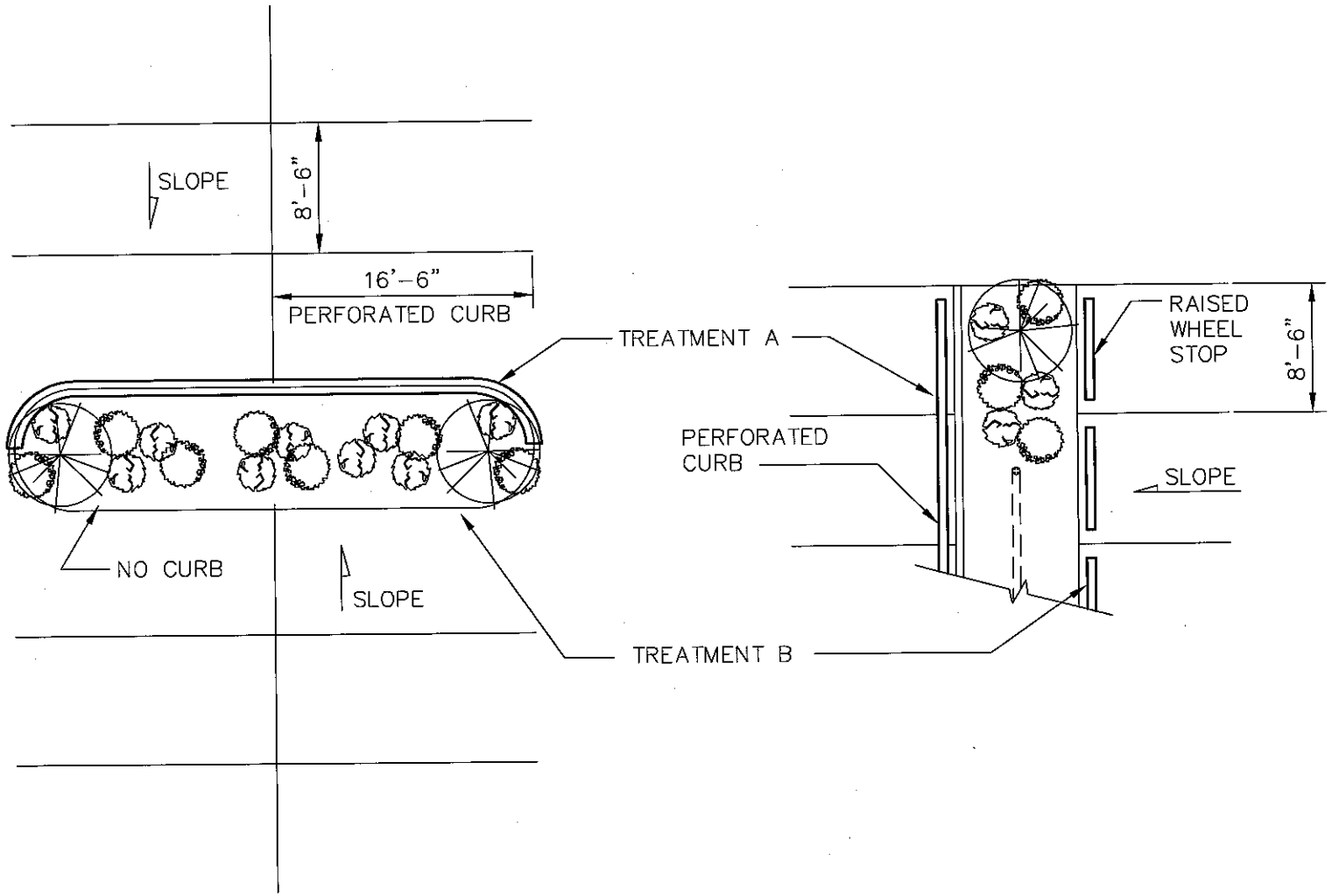

NOTES:

1. UNDERDRAINS ARE ONLY PERMITTED IN SOILS WITH INFILTRATION RATES INADEQUATE TO MEET MAXIMUM POOL AND SYSTEM DEWATER RATES.

2. WHERE PERFORATED CURBS, OR WHEEL STOPS FLUSH WITH THE PAVEMENT, ARE USED, APPROXIMATELY 6 INCHES OF ROCK OR OTHER EROSION PROTECTION MATERIAL SHOULD BE USED TO DISSIPATE ENERGY AND/OR FLOW DISPERSION. SEE PLAN NO. LID 8

TOWN OF EATONVILLE, WA
DEPARTMENT OF PUBLIC WORKS

LID PARKING ISLAND TREATEMENT PLAN A & B

STANDARD PLANS

DRAWING No. 005A-LID

REVISION: JUNE 2008	NOT TO SCALE	BY: ELR

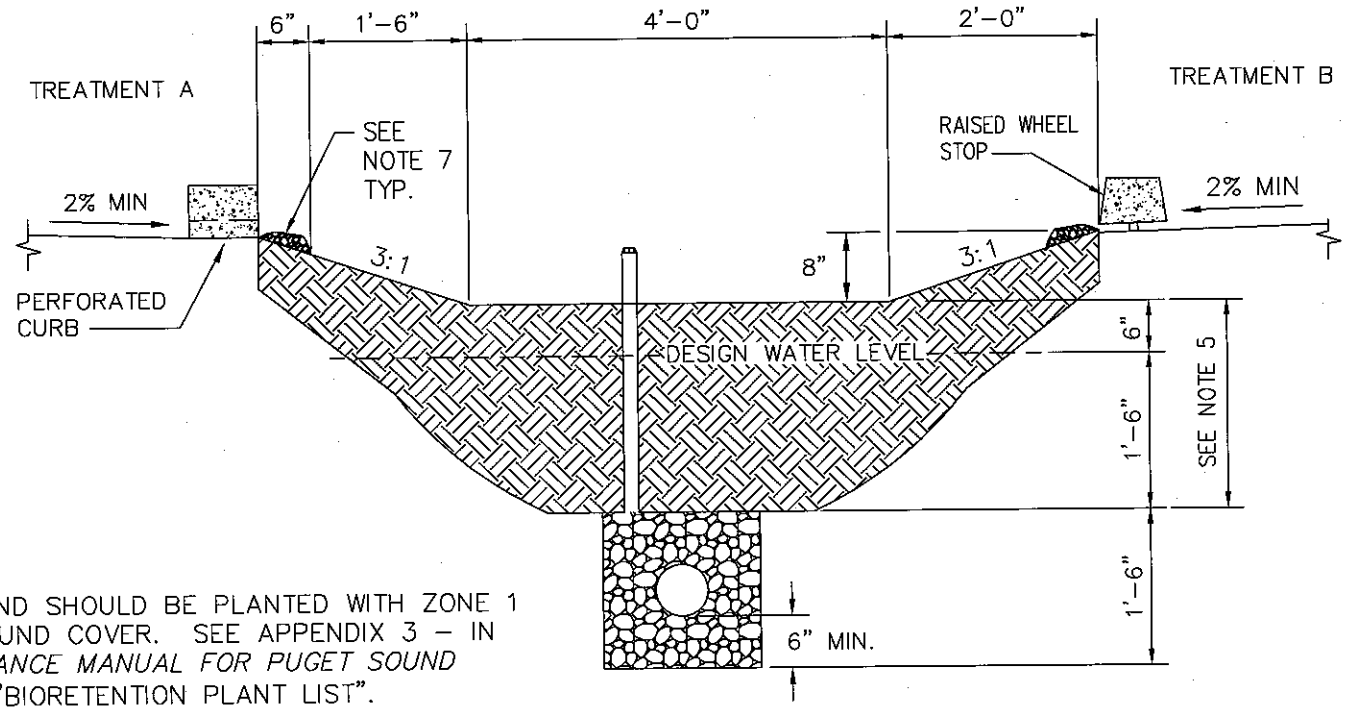

NOTES:

1. FLOOR OF PLANTING ISLAND SHOULD BE PLANTED WITH ZONE 1 TREES, SHRUBS AND GROUND COVER. SEE APPENDIX 3 – IN THE *LID TECHNICAL GUIDANCE MANUAL FOR PUGET SOUND* (JANUARY 2005) FOR A "BIORETENTION PLANT LIST".

2. SIDE SLOPES SHOULD BE PLANTED WITH ZONE 1 OR 2 GROUND COVERS.

3. BIORETENTION SOIL, COMPOSITION AND pH LEVELS SHALL MEET THE STANDARDS SET FORTH IN THE *LID TECHNICAL GUIDANCE MANUAL FOR PUGET SOUND* (CURRENT EDITION).

4. PLANTING SHALL CONSIST OF NATIVE SPECIES ABLE TO TOLERATE VARIABLE SOIL MOISTURE CONDITIONS, PONDING WATER FLUCTUATIONS, AND VARIABLE SOIL MOISTURE CONTENT.

5. AT LEAST 18 INCHES OF BIORETENTION SOIL MIX IS REQUIRED BELOW THE DESIGN WATER ELEVATION. ABOVE THIS ELEVATION AT LEAST 6 INCHES OF BIORETENTION SOIL MIX IS REQUIRED. COMPACT SUBSOILS MUST BE SCARIFIED AT 4 INCHES BELOW THE AMENDED LAYER.

6. UNDERDRAINS ARE ONLY PERMITTED IN SOILS WITH INFILTRATION RATES INADEQUATE TO MEET MAXIMUM POOL AND SYSTEM DEWATER RATES.

7. WHERE PERFORATED CURBS, OR WHEEL STOPS FLUSH WITH THE PAVEMENT, ARE USED, APPROXIMATELY 6 INCHES OF ROCK OR OTHER EROSION PROTECTION MATERIAL SHOULD BE USED TO DISSIPATE ENERGY AND/OR FLOW DISPERSION.

TOWN OF EATONVILLE, WA
DEPARTMENT OF PUBLIC WORKS

LID PARKING ISLAND SWALE SECTION

STANDARD PLANS

DRAWING No. 005B-LID

REVISION: JUNE 2008	NOT TO SCALE	BY: ELR

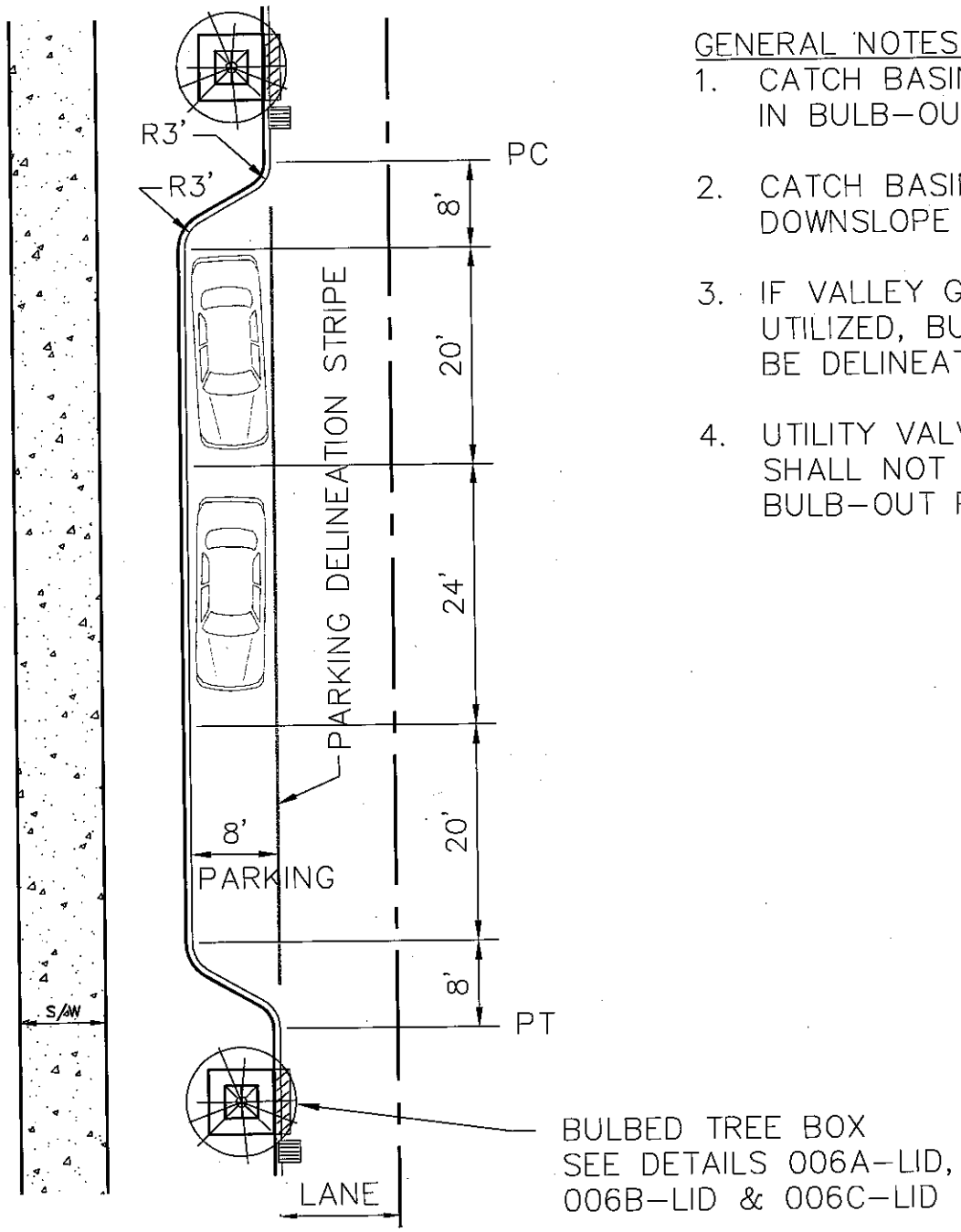

GENERAL NOTES:

1. CATCH BASINS ARE NOT PERMITTED IN BULB-OUT PARKING AREAS.
2. CATCH BASINS SHOULD BE LOCATED DOWNSLOPE FROM TREE BOXES.
3. IF VALLEY GUTTERS ARE NOT UTILIZED, BULB-OUT PARKING SHALL BE DELINEATED BY STRIPING.
4. UTILITY VALVE BOXES AND MANHOLES SHALL NOT BE LOCATED IN THE BULB-OUT PARKING AREAS.

TOWN OF EATONVILLE, WA DEPARTMENT OF PUBLIC WORKS		
LID TYPICAL DETAIL **BULB OUT PARKING** STANDARD PLANS		DRAWING No. 006-LID
REVISION: JUNE 2008	NOT TO SCALE	BY: ELR

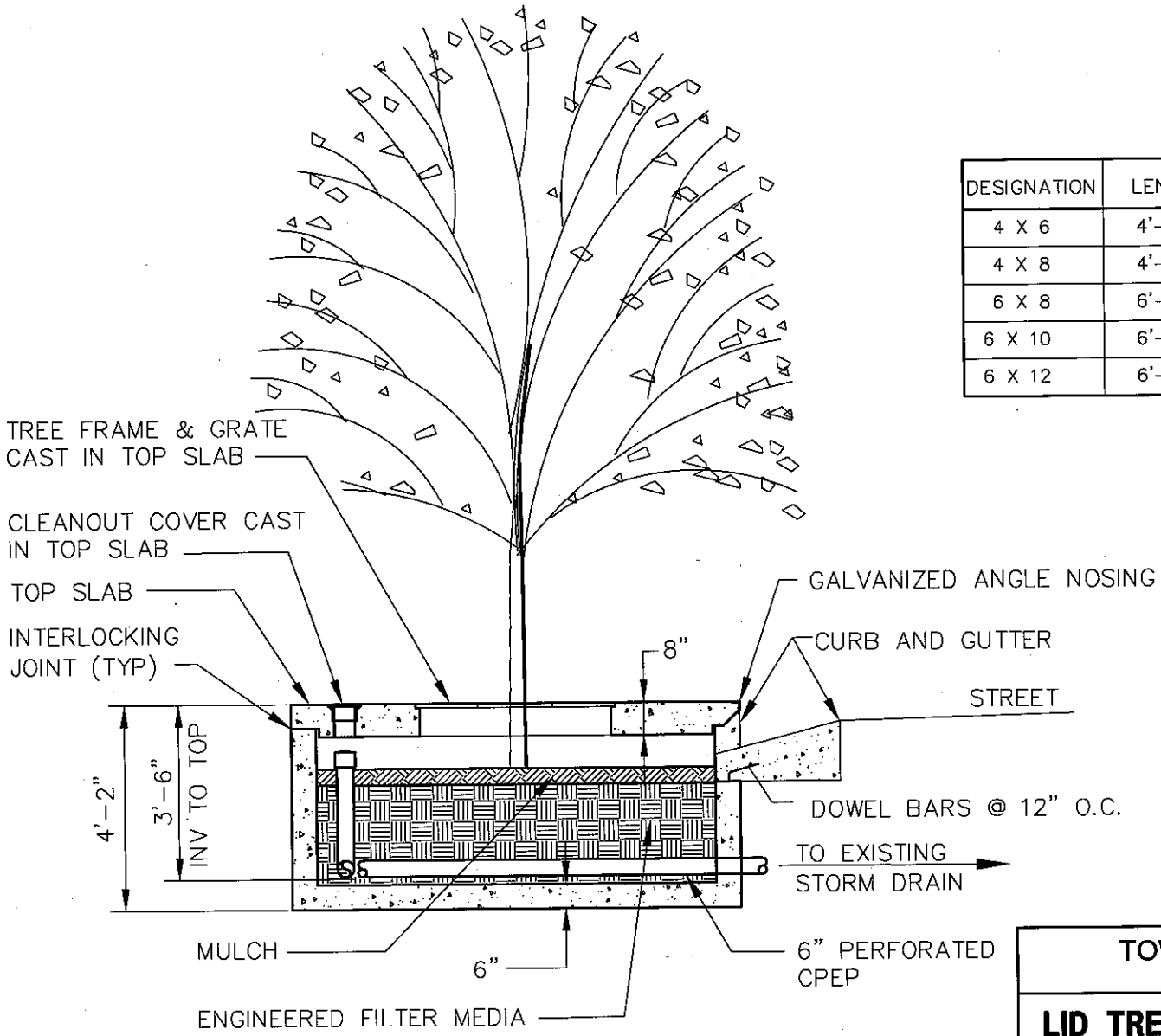

DESIGNATION	LENGTH	WIDTH	TREE GRATE QTY & SIZE
4 X 6	4'-0"	6'-0"	(1) 3X3
4 X 8	4'-0"	8'-0"	(1) 3X3
6 X 8	6'-0"	8'-0"	(1) 4X4
6 X 10	6'-0"	10'-0"	(1) 4X4
6 X 12	6'-0"	12'-0"	(2) 4X4

TOWN OF EATONVILLE, WA
DEPARTMENT OF PUBLIC WORKS

LID TREE BOX TYPICAL SECTION

STANDARD PLANS

DRAWING No. 006A-LID

REVISION: JUNE 2008 | NOT TO SCALE | BY: ELR

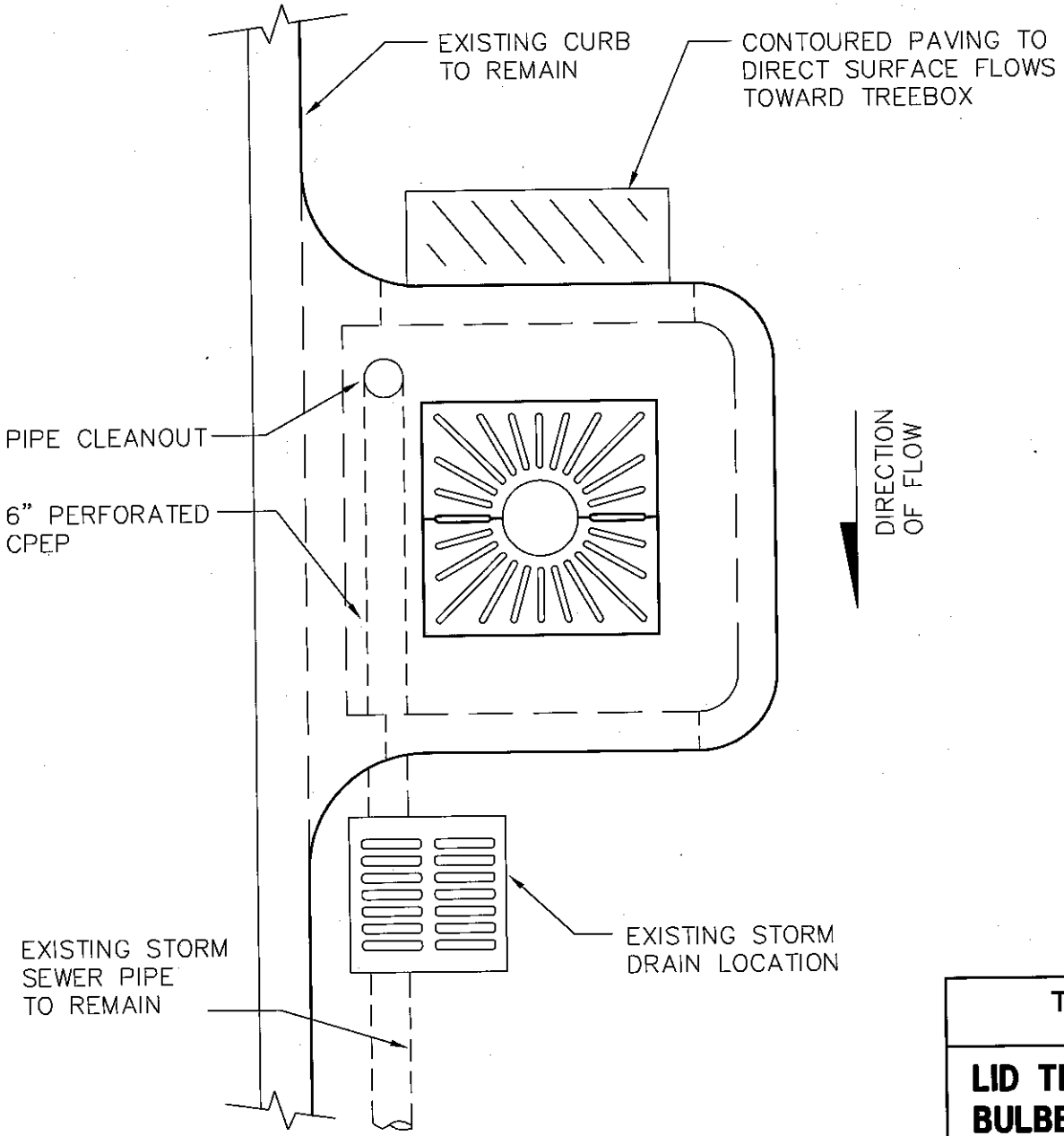

TOWN OF EATONVILLE, WA
DEPARTMENT OF PUBLIC WORKS

LID TREE BOX
BULBED - PLAN

STANDARD PLANS

DRAWING No.
006B-LID

REVISION: JUNE 2008	NOT TO SCALE	BY: ELR

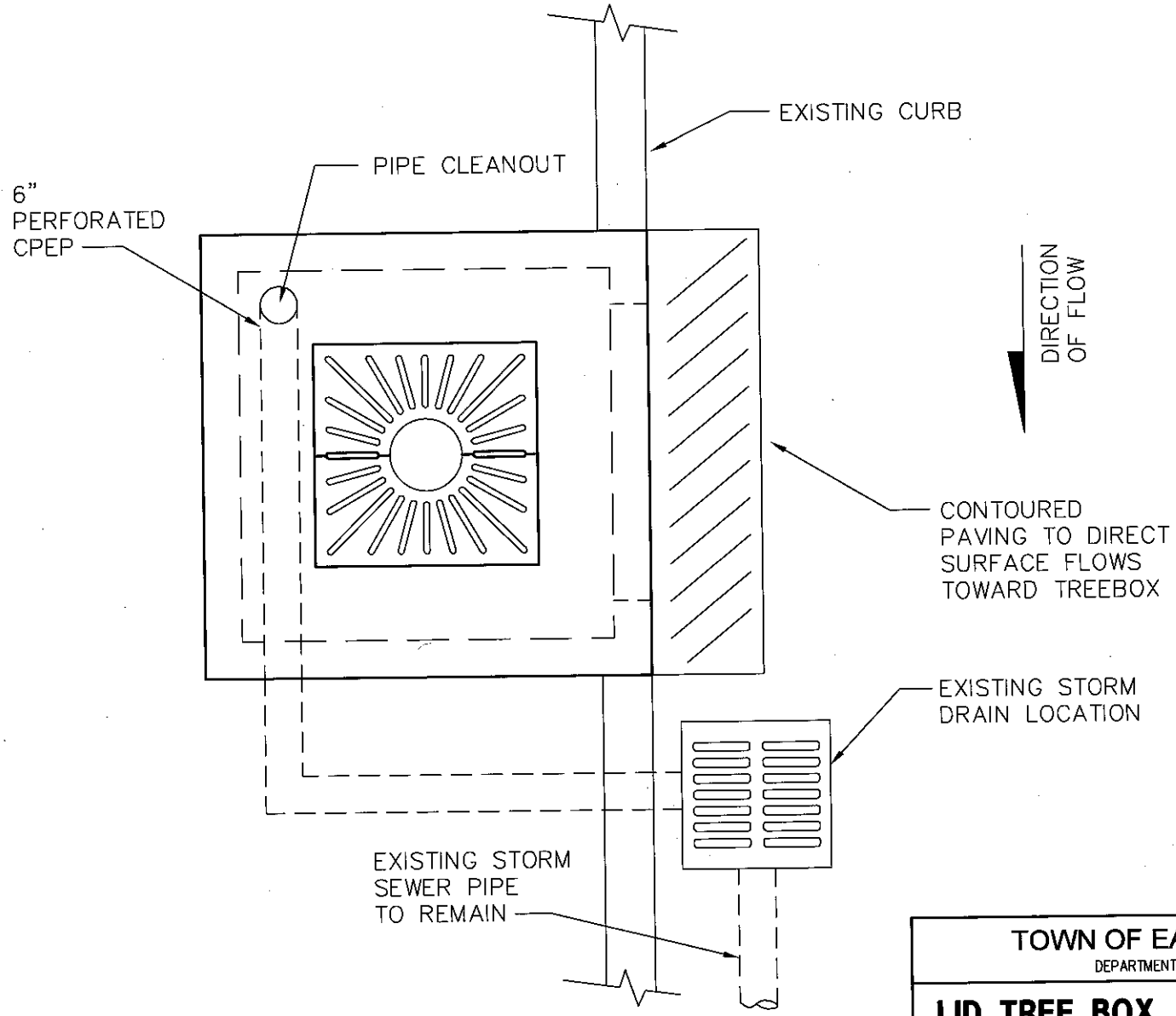

TOWN OF EATONVILLE, WA
DEPARTMENT OF PUBLIC WORKS

LID TREE BOX
RECESSED - PLAN

STANDARD PLANS

DRAWING No.
006C-LID

REVISION: JUNE 2008	NOT TO SCALE	BY: ELR

NOTES:

1. GEOTEXTILE FOR UNDERGROUND SEPARATION REQUIRED ONLY ON TYPE "C" AND "D" SOILS.
2. SUBGRADE SHOULD NOT BE COMPACTED.

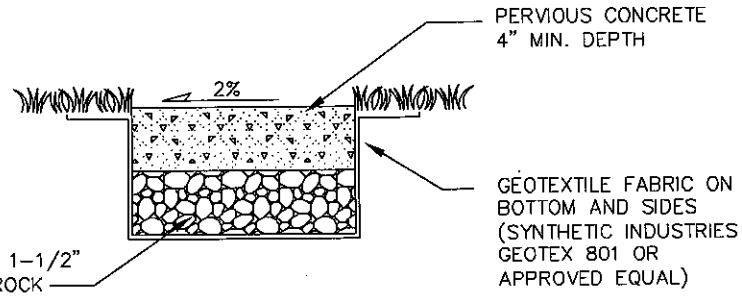

PERVIOUS CONCRETE SIDEWALK

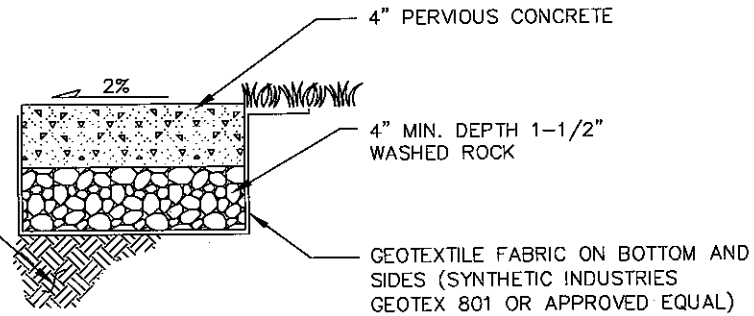

NOTES:

1. GEOTEXTILE FOR UNDERGROUND SEPARATION REQUIRED ONLY ON TYPE "C" AND "D" SOILS.

PERVIOUS CONCRETE SURFACING

DRIVABLE PERVIOUS SURFACING:
DRIVE LANE, SHOULDERS, ON-STREET PARKING

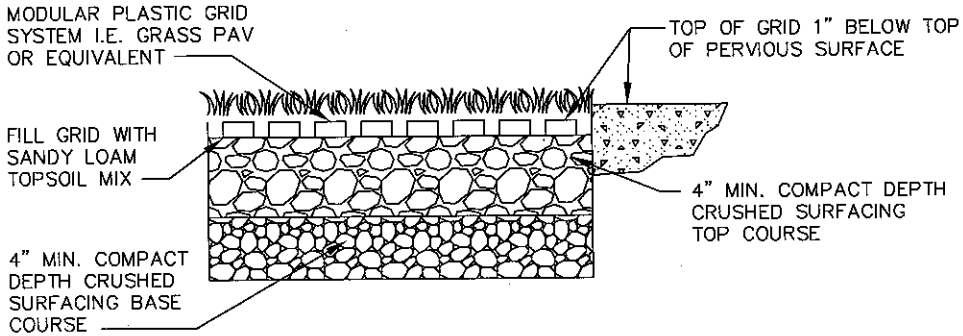

PERVIOUS GRASS PAVING

TOWN OF EATONVILLE, WA
DEPARTMENT OF PUBLIC WORKS

LID TYPICAL DETAIL
PERVIOUS PAVING

STANDARD PLANS

DRAWING No.
007-LID

REVISION: JUNE 2008	NOT TO SCALE	BY: ELR

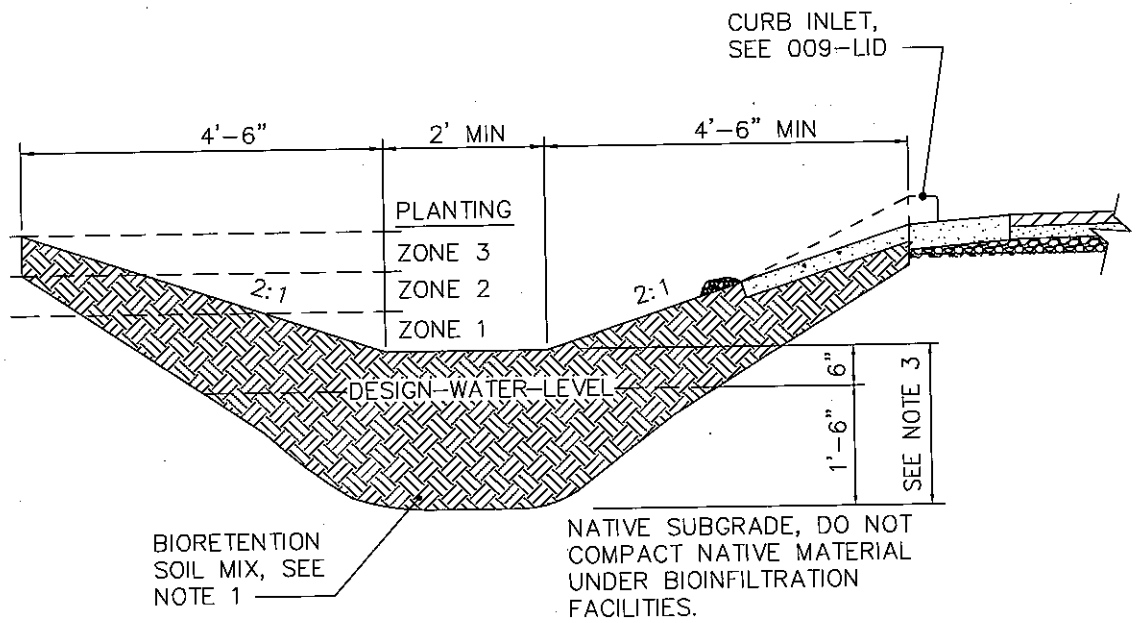

NOTES:

1. BIORETENTION SOIL, COMPOSITION AND pH LEVELS SHALL MEET THE STANDARDS SET FORTH IN THE *LID TECHNICAL GUIDANCE MANUAL FOR PUGET SOUND* (CURRENT EDITION).

2. PLANTING SHALL CONSIST OF NATIVE SPECIES ABLE TO TOLERATE VARIABLE SOIL MOISTURE CONDITIONS, PONDING WATER FLUCTUATIONS, AND VARIABLE SOIL MOISTURE CONTENT.
SEE APPENDIX 3 – IN THE *LID TECHNICAL GUIDANCE MANUAL FOR PUGET SOUND* (JANUARY 2005) FOR A "BIORETENTION PLANT LIST".

3. AT LEAST 18 INCHES OF BIORETENTION SOIL MIX IS REQUIRED BELOW THE DESIGN WATER ELEVATION. ABOVE THIS ELEVATION AT LEAST 6 INCHES OF BIORETENTION SOIL MIX IS REQUIRED. COMPACT SUBSOILS MUST BE SCARIFIED AT 4 INCHES BELOW THE AMENDED LAYER.

4. UNDERDRAINS ARE REQUIRED IN SOILS WITH INFILTRATION RATES INADEQUATE TO MEET MAXIMUM POOL AND SYSTEM DEWATER RATES.

5. SEE 009-LID FOR CURB INLETS.

6. ZONE 1 PLANTINGS SHOULD BE USED BELOW THE DESIGN WATER ELEVATION.

TOWN OF EATONVILLE, WA DEPARTMENT OF PUBLIC WORKS		
LID TYPICAL DETAIL **BIORETENTION SWALE** STANDARD PLANS		DRAWING No. 008-LID
REVISION: JUNE 2008	NOT TO SCALE	BY: ELR

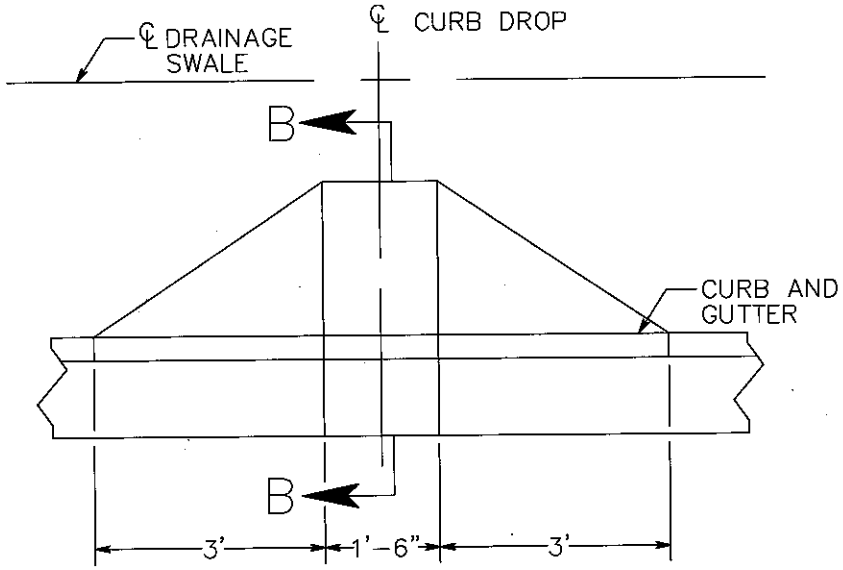

CURB INLET TYPE 1

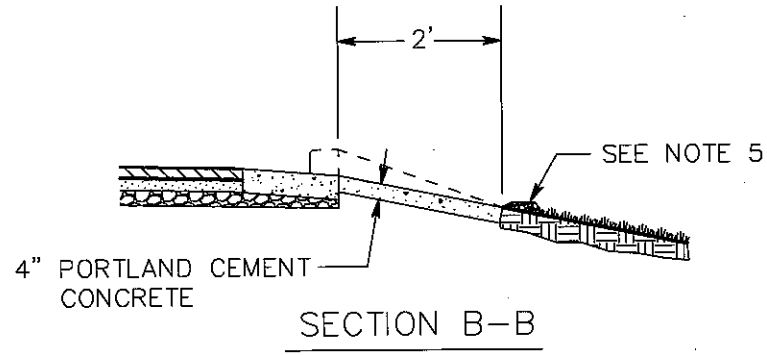

SECTION B–B

GENERAL NOTES

1. CURB INLET SHALL BE CONSTRUCTED IN ACCORDANCE WITH ASTM C 478 (AASHTO M 199) & ASTM C 890 UNLESS OTHERWISE SHOWN ON PLANS OR NOTED IN THE PROJECT SPECIAL PROVISIONS.
2. TOP SURFACE TO BE BROOM FINISHED.
3. ALL EXTERNAL EDGES NOT LABELED SHALL BE TROWELLED WITH 1/4" RADIUS EDGER.
4. INLETS SHOULD BE SPACED CONSISTENT WITH CATCH BASIN SPACING REQUIRED IN THE STORM WATER MANUAL.
5. WHERE CURB INLETS ARE USED, APPROX. 6 INCHES OF ROCK OR OTHER EROSION PROTECTION MATERIAL SHOULD BE USED TO DISSIPATE ENERGY AND/OR FLOW DISPERSION.
6. PERVIOUS PAVING MAY BE USED FOR INLET WITH TOWN APPROVAL.

TOWN OF EATONVILLE, WA
DEPARTMENT OF PUBLIC WORKS

LID TYPICAL DETAIL
CURB INLET

STANDARD PLANS

DRAWING No.
009-LID

REVISION: JUNE 2008	NOT TO SCALE	BY: ELR